COOLBIT

VIP USE

Efficient flitration start with a low exchanging rate.

AIR CLEANING SOLUTION

BW2000 - Oil Mist/ Dust collection equipment

BW2000 Model

Technical data

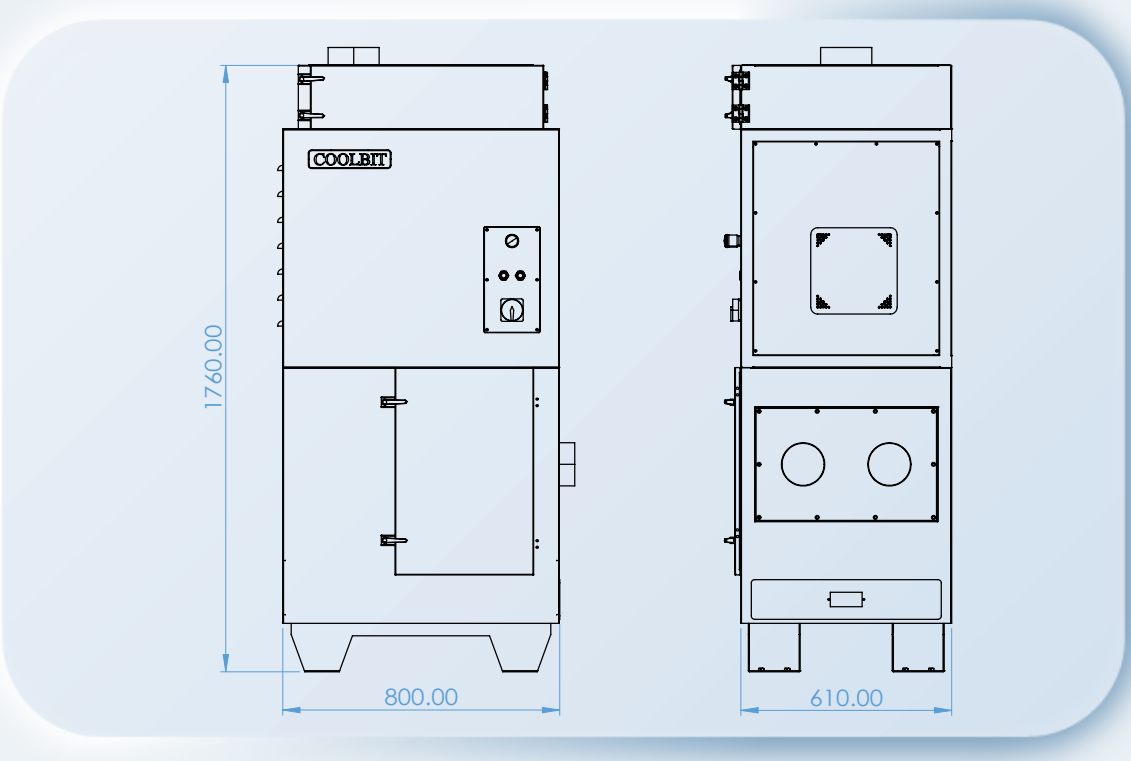

Model	Voltage	Frequency	Motor	Air Flow
BW2000	3P 220/380V	50/60 Hz	1500W	1980 m^3/h

Feature

The new BW2000 is specially designed to filter dust, smoke and oil vapor.

Can be used to collect large amounts of dust, even without changing the filters.

Coolbit's concept: Clean, Energy-Saving, Green Earth.

Coolbit emphasizes the design of multi-channel high-efficiency filter layers.

The core of BW2000 is the Japanese patented NF filter material,

which is reusable metal filter material.

And it has the characteristics of high efficiency and low wind resistance.

BW2000 Modularity Filter Design

8 filter layer structure (Can be customized)

-layer 1 V-mesh filter

-layer 2 PP filter cotton

-layer 3 AX Cyclone metal filter

-layer 4 PP filter cotton

-layer 5 AX Cyclone metal filter

-layer 6 PP filter cotton

-layer 7 AX Cyclone metal filter

-layer 8 3D Nickel Filter

2 layers rear filter structure

-layer 1 P-Cell

Recommended replacement time: 3 months

-layer 2 PP filter cotton

Recommended replacement time: 1 months

※ The company's recommended replacement time is a reference value,because the air quality of different environments is different, Please evaluate the pollution status by yourself according to each usage environment, and replace the consumables.

BW2000 集塵機

Japan TAKAOKA Co., Ltd. technical cooperation
Japanese original NF metal filter, High efficient without Supplies

+ ECO design
+ Great suction power
+ No maintenance cost problem
+ Module-filter design
+ Low vibration

Easy Self-Maintenance

COOLBIT's filter is an aerodynamic filter,
so it can maintain high efficiency for a long time.
And it's easy to maintain without the need for hand tools.
With so many companies offering efficient collectors,
But they are very expensive to maintain.
Customers cannot afford such high maintenance costs for a long time

BW2000 Special Filter Layer

BW2000 Filter

Advantage

COOLBIT emphasizes not using expensive consumables, but adopts highly efficient reusable filter materials. Open the safety door of the filter layer, and the filter screen can be easily taken out for maintenance, cleaning and replacement.
3D Nickel Filter is Japanese patented technology.

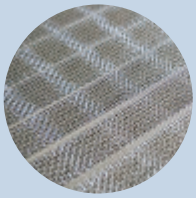

V-mesh filter

Of low pressure loss, high dust collection and high content.
Applicable to factories, composed of stainless steel mesh,
The multi-layer filter structure enlarges the surface area of the filter.
Can be washed and reused, long service life

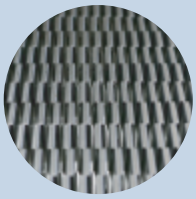

AX Cyclone metal filter

With low pressure loss characteristics, forming air turbulence through the labyrinth structure.
Let the dust particles attract each other, forming larger particles to fall, or intercepted on the filter.
It can be washed and reused, and has a long service life.

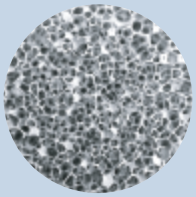

3D Nickel Filter

Low pressure loss, good filtration effect. Filtered for 5μm particles.
It can also effectively block open flames
(in line with the flame penetration prevention standard UL 1046, DIN18869-5)
Can be washed and reused, long service life.
In line with the concept of environmental 3R sustainable management.

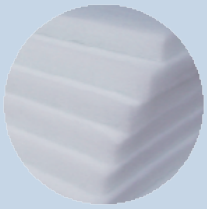

PP filter cotton

100% polyester fiber, heat-bonded and interlaced in an irregular pattern,
It forms a high dust-filling effect, with strong bonding and no cracking.
So it won't cause re-pollution.
Disposable, non-reusable, low cost, high efficiency.

庫林工業有限公司
COOLING INDUSTRIAL CO.,LTD.
www.coolbit.com.tw

TEL: 04-24851995
FAX: 04-24853380
E-mail: service@coolbit.com.tw
NO.85,Dali Rd.,Dali Dist.,Taichung City 412,Taiwan

"The Trend Toward Clean Energy is Irreversible"